HOLY STONE

HS175D MAX

User Manual | V 1.0

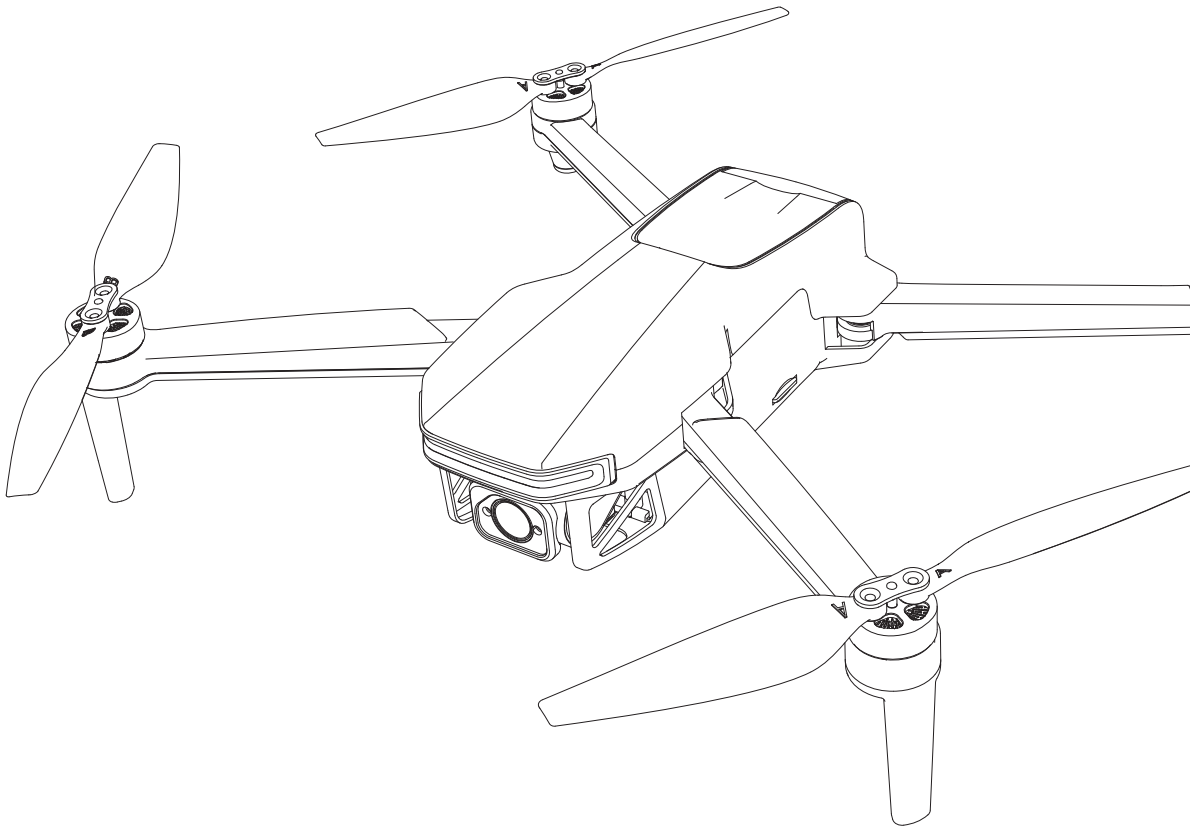

+1(833)766-4733

usa@holystone.com (USA)

ca@holystone.com (CA)

eu@holystone.com (EU)

au@holystone.com(AU)

CONTENTS

1. Reading Guide

Icon 01
Recommended Steps 01
Access Tutorial Videos 02
Download the App 02

2. Product Overview

Package Contents 03
Diagram of the Drone 04
Diagram of the Transmitter 05
Drone Status Indicator 10

3. Pre-Flight Preparation

Charging 11
Preparing the Drone 13
Preparing the Transmitter 15
Pairing 16
APP Connection 18
GPS Mode (On / Off) 19
GPS Signal Search 20
Compass Calibration 21
Gyroscope Calibration 23
Pre-Flight Checklist 24

4. Basic Flight

Unlock / Lock 25
Takeoff / Landing 26
Control Stick Mode 27
Flight Stabilization 29

5. Flight Features

Emergency Stop 31
Return to Home (RTH) 32
Camera Features 35
Speed Switch 36
Headless Mode 37

6. App Guide

App Interface 39
App Features 42

7. Appendix

Troubleshooting 51
Specifications 52
Propeller Replacement 54
Contact Information 55
Compliance Information 56

Before You Begin

Icon

"⚠" essential precautions.

"💡" tips for operation and usage.

Recommended Steps

Our product offers both tutorial videos and the following resources:

- User Manual
- Disclaimer and Safety Guidelines

We recommend watching the tutorial video first. Then read the *Disclaimer and Safety Guidelines* to understand important usage precautions. For detailed product information, please refer to the *User Manual*.

Access Tutorial Videos

To ensure you're using the product safely and correctly, scan the QR code below to view our tutorial videos.

Download the HS FLY App

Simply scan the QR code below.

iOS

Android APP on Google play

The interface and functions of HS FLY may vary as the software version is updated. Actual user experience is based on the software version used.

2.1 Package Contents >>

1
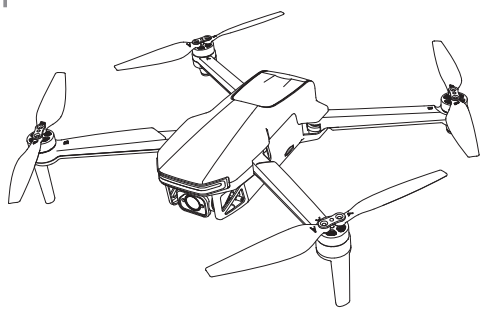

2
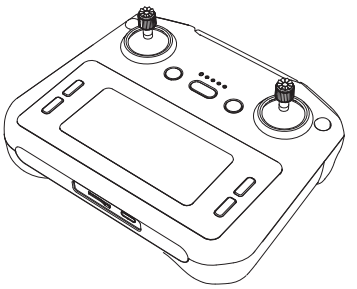

3
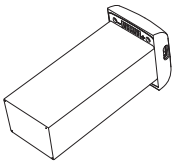

4
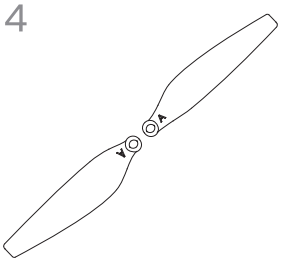

5


6


7
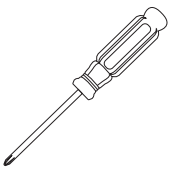

8
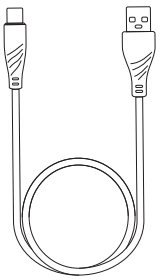

9


10


11


12


1 Drone

2 Transmitter

3 Drone Battery

4 Propellers

5 Propeller Blade Clamp

6 Joystick

7 Screwdriver

8 USB Charging Cable

9 Connection Cable (lightning)

10 Connection Cable (type-C)

11 Connection Cable (micro-USB)

12 User Manual

2.2 Diagram of the Drone >>

Drone

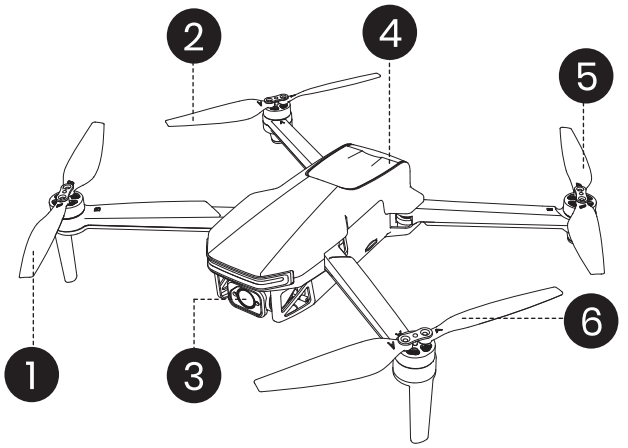

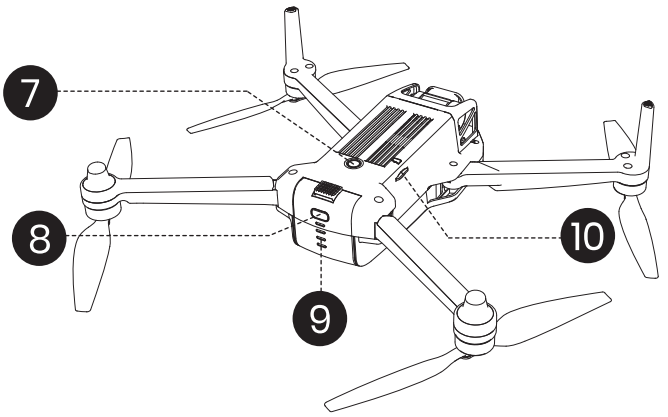

1 Propeller B

2 Propeller A

3 Camera

4 Drone Battery

5 Propeller B

6 Propeller A

7 Optical Flow Lens

8 Power Button

9 Battery Level Lights

10 TF Card Slot

· **Turning on/off:** Press and hold the power button for 3 seconds.

· **Checking battery level:** Short press the power button once to turn on the drone battery lights(display the current battery level of the drone).

2.3 Diagram of the Transmitter >>

Transmitter

- **Front:**

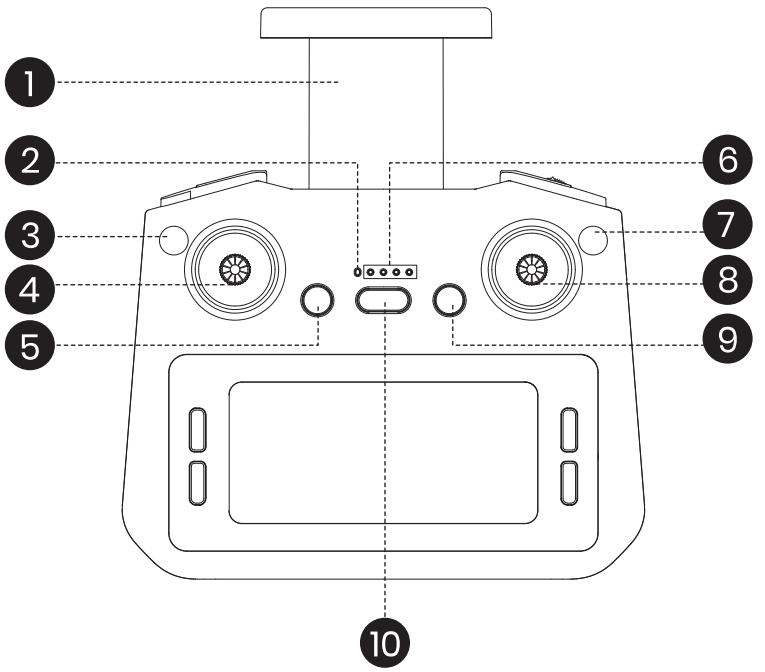

1 Cellphone Holder

2 Status LED

3 Headless Mode: Short Press

4 Left Joystick

5 Takeoff/Landing: Long Press

6 Battery Level LEDs

7 Return to Home: Short Press
GPS Switch on/off: Long Press

8 Right Joystick

9 Check Battery Level: Short Press
Power Button: Short press, then hold

10 Speed Switch: Short Press
Mute the Current Beep: Long Press

2.3 Diagram of the Transmitter >>

Transmitter

- **Top:**

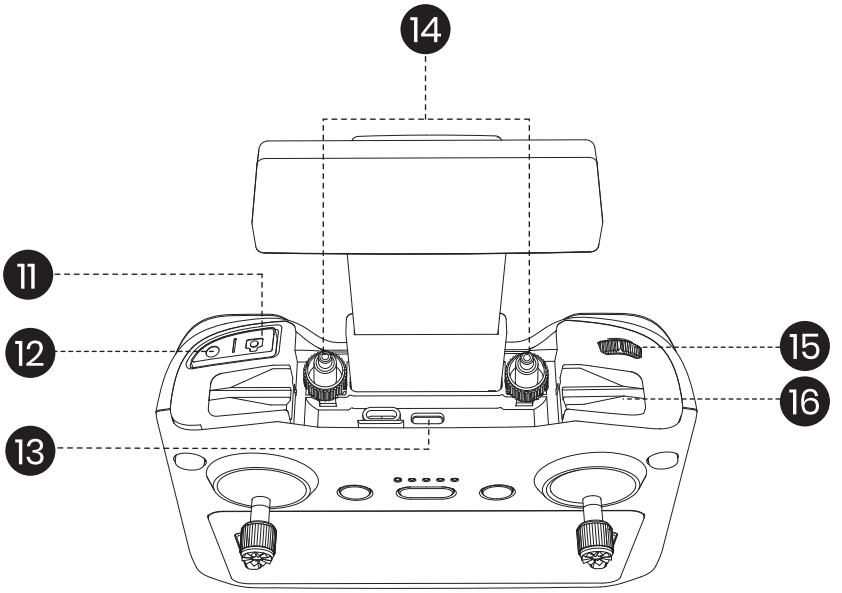

- **Bottom:**

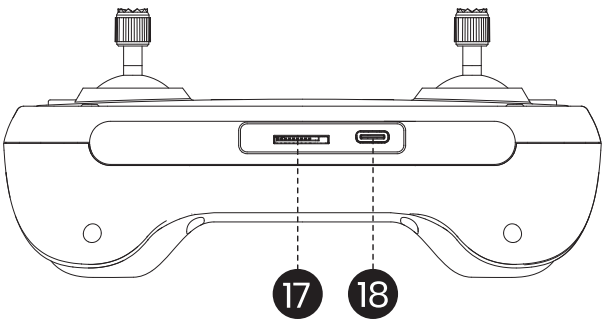

11 Take Photo: Short Press

12 Record Video: Short Press

13 Connection Port

14 Storage Slots for Joysticks

15 Camera Adjustment Dial

16 Cellphone Slot

17 TF Card Slot

18 Charging Port

2.3 Diagram of the Transmitter >>

LCD Screen

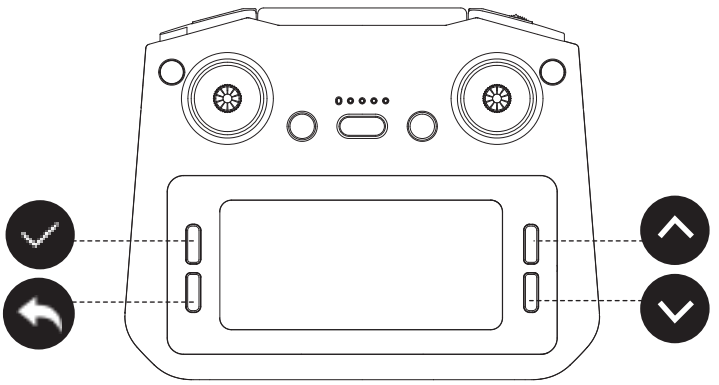

Live View Interface:

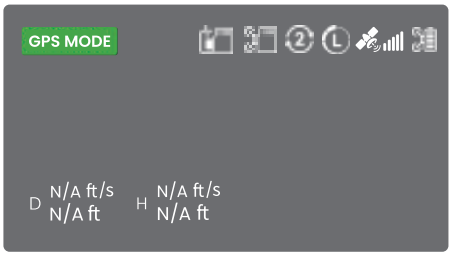

Menu Interface:



Album

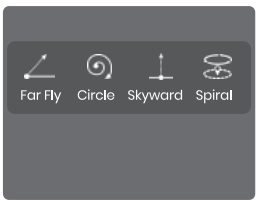

Multifunction

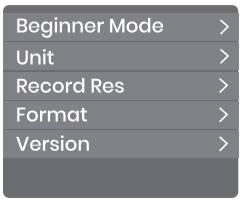

Settings

Button Overview

NOTE: The ***Confirm, Back and Up*** button function varies depending on the interface.

Confirm Button:
Live View Interface: Press to enter the album interface.
Menu Interface: Press to confirm.

Back Button:
Live View Interface: Press to enter the settings interface.
Menu Interface: Press to go back.

Up Button:
Live View Interface: Press to enter the Multifunction.
Menu Interface: Press to select up.

Down Button: Press to select down.

Live View Interface Overview

System Status GPS MODE : Displays the flight status.

Transmitter TF Indicator : Displays the installation status of the TF card on the current transmitter.

Drone TF Indicator : Displays the installation status of the TF card on the current drone.

Control Stick Mode : Displays the current control stick mode. To switch the control stick mode, refer to page 28 for details.

Speed Mode : Displays current speed mode. To switch the speed mode, refer to page 36 for details.

GPS Signal : Displays current GPS signal strength.

Drone Battery Level : Real-time display of the current battery level of the drone.

Flight Distance D N/A ft/s N/A ft : Horizontal distance from the Home Point.

Flight Altitude H N/A ft/s N/A ft : Vertical distance from the Home Point.

Menu Interface Operations

Multifunction:

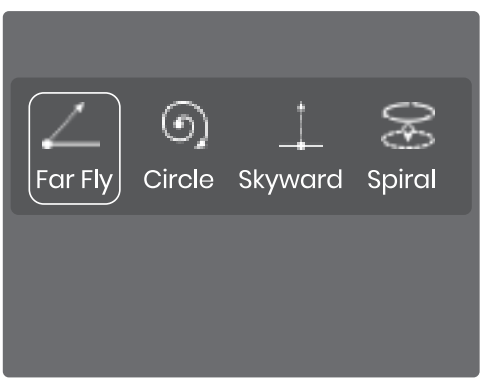

Step 1: On the Live View interface, press the ^ button to enter the Multifunction menu (Far Fly, Circle, Skyward, and Spiral).

Step 2: Press the ^ / v button to select a function, then press the ✓ button to activate it. A REC timer appears during execution. The menu disappears after 3 seconds.

Step 3: To exit the current function, you can either move the right joystick in any direction to cancel, or press the ^ button to recall the menu and then press ✓ button to cancel.

Album :



Step 1: On the Live View interface, press the ✓ button to enter the album.

Step 2: Press the ^ / v button to select a photo or video album, then press the ✓ button to open it.

Step 3: Press the ^ / v button to select the desired file, then press the ✓ button to view it.

Step 4: Press the ↩ button to return to the previous interface.

Settings:

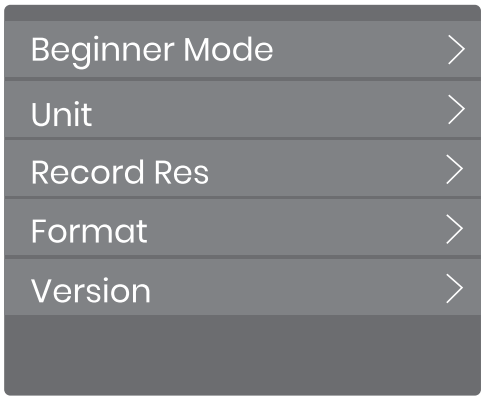

Step 1: On the Live View interface, press the ↩ button to enter the Settings interface, where you can adjust beginner mode, units, video resolution, and format.

Step 2: Press the ^ / v buttons to highlight the desired option, press ✓ button to enter, select the preferred parameter, then press ✓ button again to save.

Step 3: Press the ↩ button to return to the previous interface.

2.4 Drone Status Indicator >>

Indicator Status	Meanings
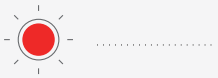 [Red] Fast Flashing	Power On.
 [Red] Slow Flashing	Unsuccessful pairing after powering on the drone.
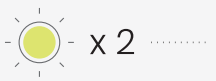 [Yellow] Fast Double Flashing	Paired successful/Searching for GPS signals.
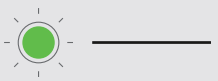 [Green] Steady	GPS signal search successful.
 [Yellow] Steady	Optical Flow Mode (No GPS)
 [Green] Slow Flashing	Optical Flow Mode (With GPS)

3.1 Charging >>

Drone Battery

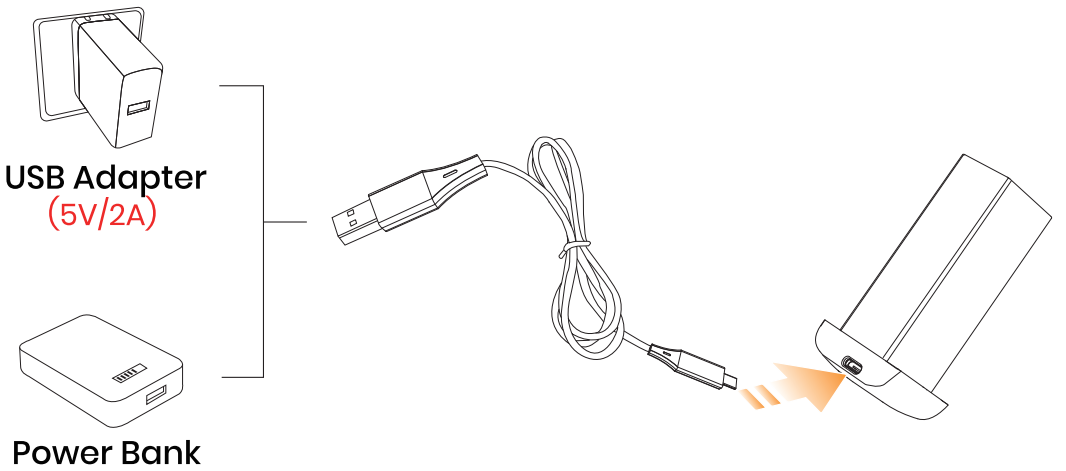

1. Remove the battery from the drone and connect it to a USB charging cable.
2. Plug the USB charging cable into a USB charging port on a power bank or a USB adapter (5V/2A).
3. When charging, the battery lights of the drone flash blue; When fully charged, all battery lights turn solid on.
4. Fastest charging time: approximately 1.5 hours (using Fast Chargers).
5. It is recommended to use USB chargers that support PD3.0 or QC5.0 fast charging protocols.

⚠ · Before charging, please read the instructions in the "Battery Safety" section of the "Disclaimer and Safety Guidelines" carefully!
· DO NOT charge a battery immediately after a flight as the temperature may be too high. Please wait until it cools down to room temperature before charging again.
· Please use the original charging cable to charge the battery.

3.1 Charging >>

Transmitter

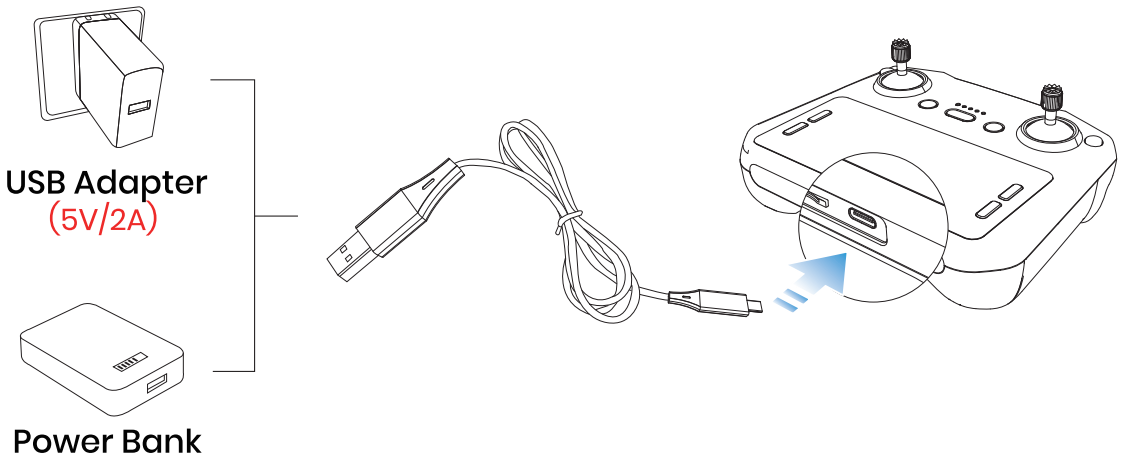

1. Connect the USB charging cable to the charging port of the transmitter.
2. Plug the USB charging cable into a USB charging port on power bank or USB adapter (5V/2A).
3. During charging, the four battery indicator lights cycle in sequence and turn solid progressively as the battery level increases.
4. Charging time: about 3 hours.

*** Low Battery Signal: The battery indicator shows only one green light flashing continuously.**

- The transmitter cannot be turned on while it is charging.
- Before charging, please read the instructions in the "Battery Safety" section of the "Disclaimer and Safety Guidelines" carefully!
- Please use the original charging cable to charge the transmitter.

3.2 Preparing the Drone >>

Battery Installation

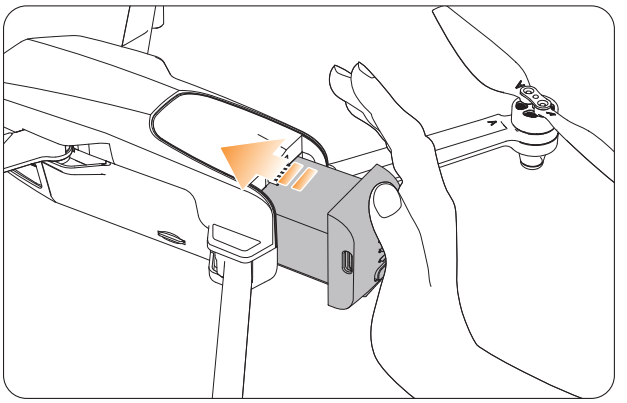

Push the battery correctly into the drone. Make sure that you hear a click sound, which indicates that the battery is firmly installed.

· Please make sure that the battery is firmly installed. Otherwise, the flight safety of your drone may be affected. The drone may crash due to a power-cut during the flight.

· Only install/remove the battery when it is powered off.

*** How to remove the drone battery?**

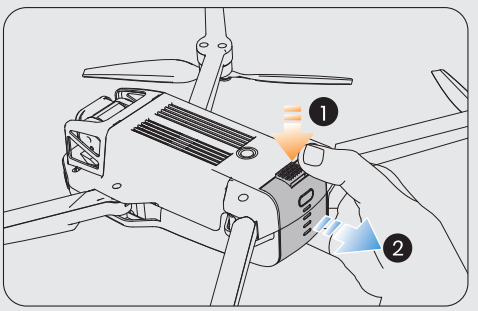

Turn the drone upside down. Press the lock button on the battery, and pull the battery out from the drone.

3.2 Preparing the Drone >>

Arms

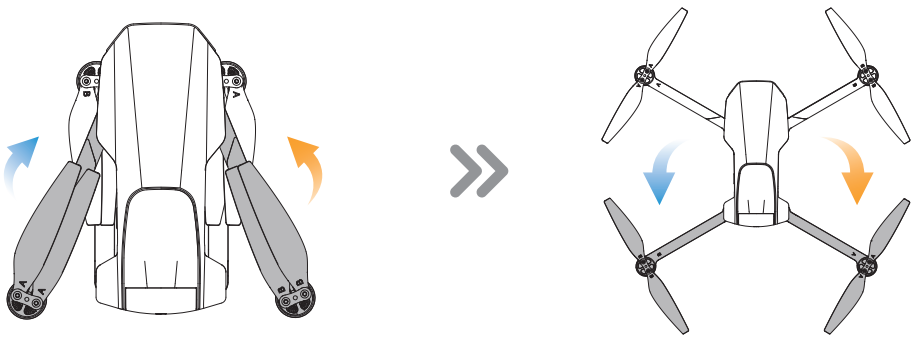

All arms of the drone are folded when it is packaged at the factory. First, unfold the front arms, then unfold the rear arms.

TF Card

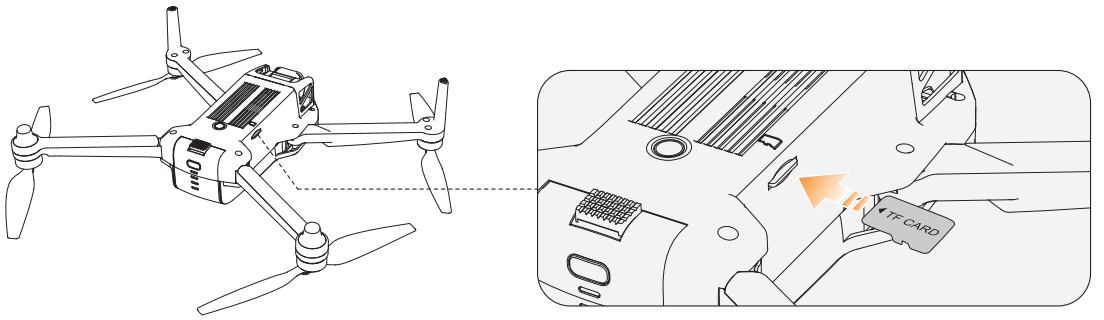

Insert a TF card (Class 10 or above, up to 256 GB, FAT32 format required) into the slot before turning on the drone to store photos and videos.

3.3 Preparing the Transmitter >>

Joystick

1

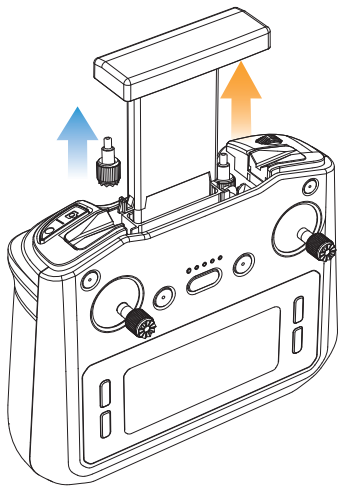

2

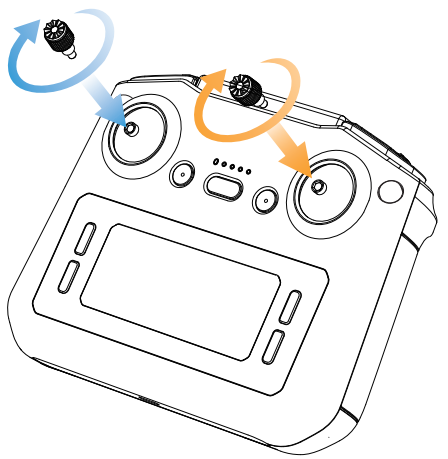

Extend the phone holder. Take the joysticks out of the storage slots and mount them onto the transmitter.

3.3 Preparing the Transmitter >>

TF Card

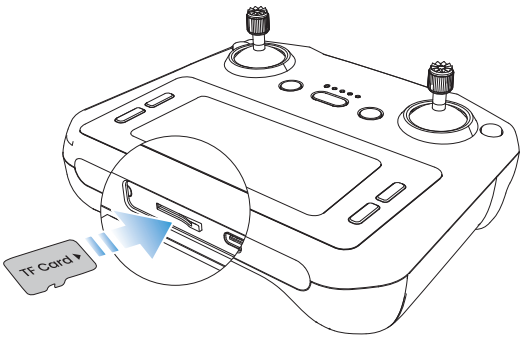

To store photos and videos, insert a TF card into the slot. Supports up to 256 GB (Class 10+), FAT32 required.

3.4 Pairing >>

1 Power on the Drone

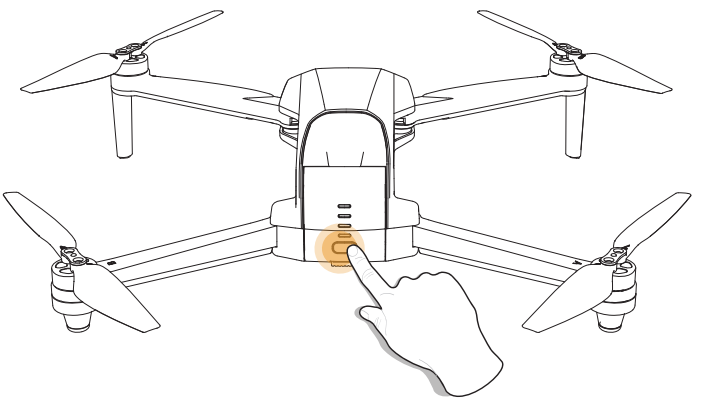

Long press the ▭ button to power on the drone.

3.4 Pairing >>

2 Power on the Transmitter

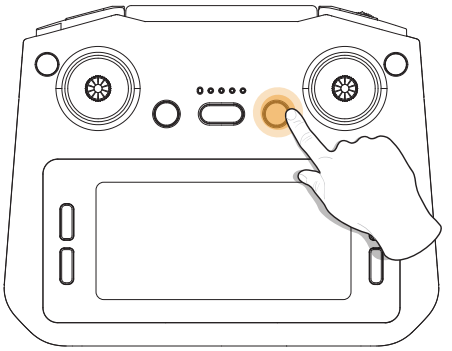

Short press the power button once, then press and hold for 3 seconds to turn it on. The status indicator is flashing red.

3 Connecting

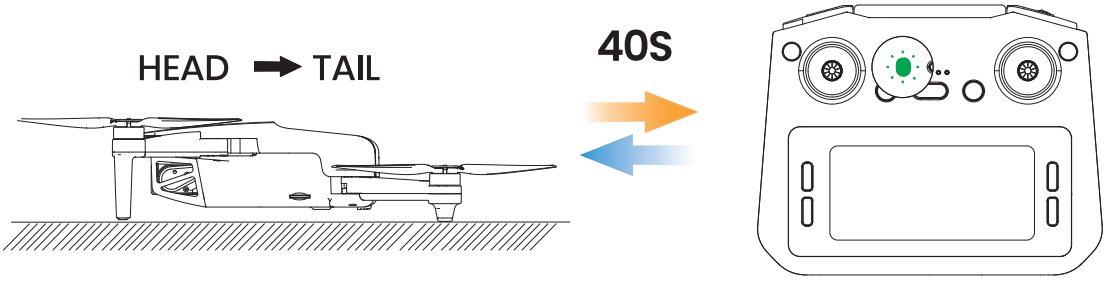

It takes about **40 seconds** to pair the transmitter with the drone. No manual pairing is required.

Once the transmitter is successfully paired with the drone, it will emit a long beep, and the status indicator is turn solid green.

After pairing is complete, you can view the live view directly on the transmitter and start flying. For more features, connect a mobile phone (see page 18 for details) and use the app .

Note: The LCD screen will automatically turn off when a mobile device is connected to the video transmission port.

3.5 App Connection >>

1 **Cellphone connection:** Pull out the phone holder. Select the appropriate connection cable (Type-C, Micro-USB, or Lightning) from the package. Connect the end marked with a transmitter icon ( ) to the transmitter and plug the other end into your cellphone.

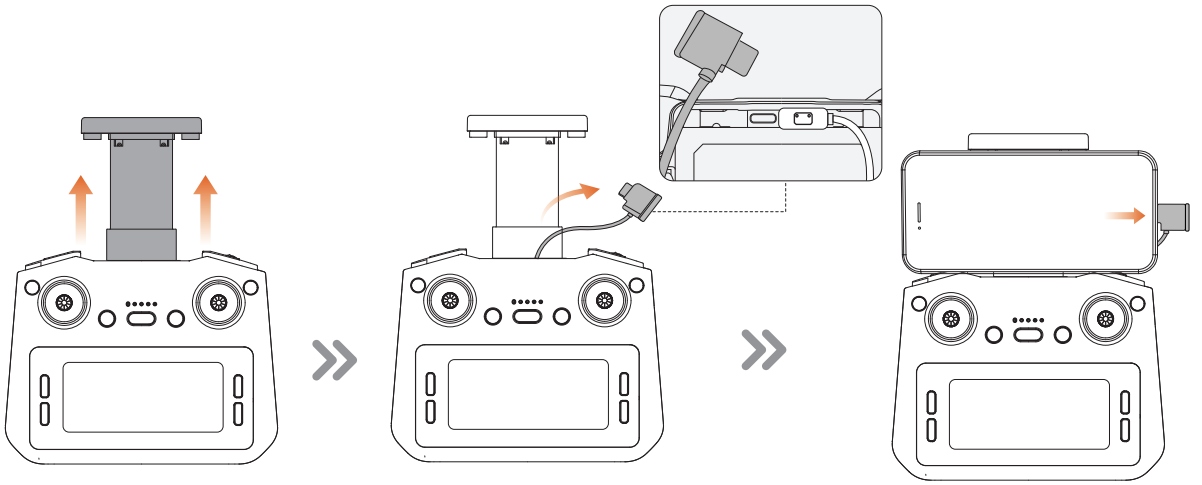

2 Run the "**HS FLY**" app and open up the live-feed interface.



HS FLY App



3.6 GPS Mode (On / Off) >>

The drone is set to GPS Mode by default each time it is powered on. When the drone is in an open, interference-free environment, it can automatically search for GPS signals.

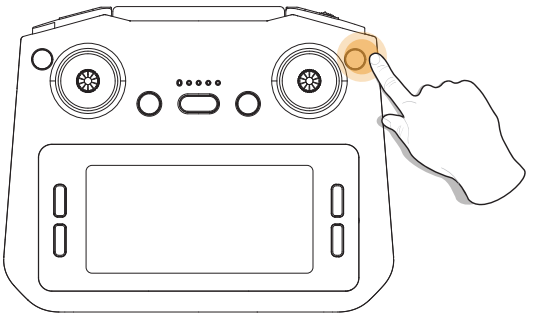

If the GPS signal is weak, or if you plan to fly the drone indoors, long press the button to exit GPS mode for a proper takeoff. The drone is now in ***ATTI MODE***.

Note: Once a valid GPS signal is acquired, GPS Mode cannot be disabled.

· When GPS signal is successfully acquired, the indicator light turns solid green.
· When GPS Mode is disabled, the indicator light turns solid yellow.
· Flight altitude limit under ***ATTI MODE*** is within 19.7ft.

3.7 GPS Signal Search >>

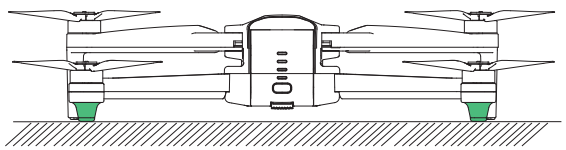

GPS

After powering on, put the drone on a flat surface. Make sure there are no external sources of signal interference around. The drone will automatically perform a search for GPS signals. The drone has successfully located the GPS signal when the drone status indicator turns solid green.

Important Notes

- Always wait until the GPS signal is strong before taking off. Weak signal may affect stability and positioning accuracy.
- Fly in open outdoor areas. Avoid tall buildings, trees, metal structures, and indoor environments, as they may block or interfere with GPS signals.
- GPS signal may be weak or unstable in areas with obstacles or electromagnetic interference (e.g., urban areas, under bridges, near large structures).
- If GPS signal becomes weak during flight, the drone may drift more and positioning accuracy may decrease. Some features (such as RTH) may be limited.
- Always maintain visual line of sight and be prepared to manually control the drone if GPS signal is insufficient.

3.8 Compass Calibration >>

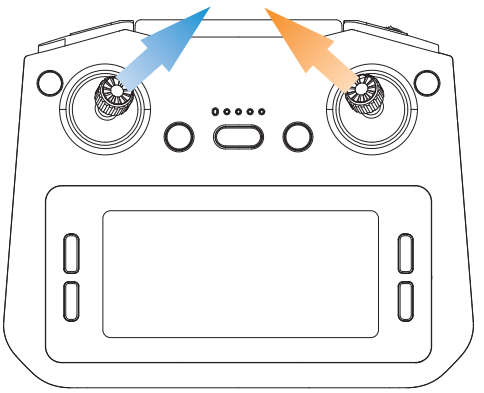

- **STEP 1**

Push both joysticks **towards the inner, upper corners** simultaneously to start the compass calibration. The transmitter will produces a long beep.

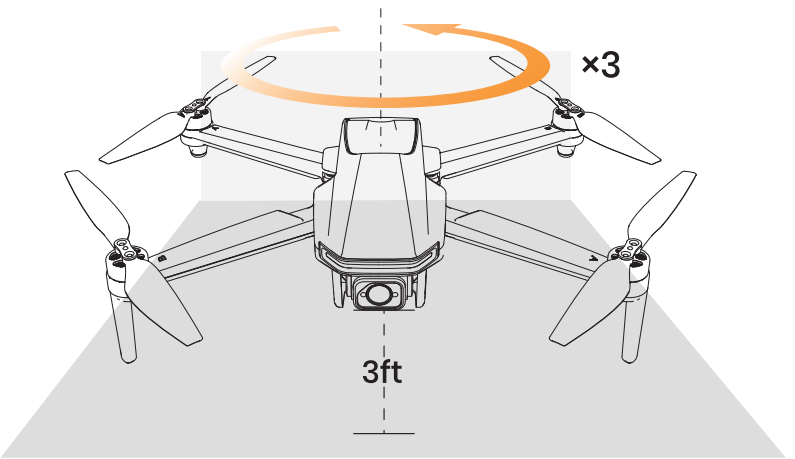

- **STEP 2**

Keep the drone parallel to the floor, and spin the drone three times. The transmitter produces a short beep. You can proceed to step 3.

3.8 Compass Calibration >>

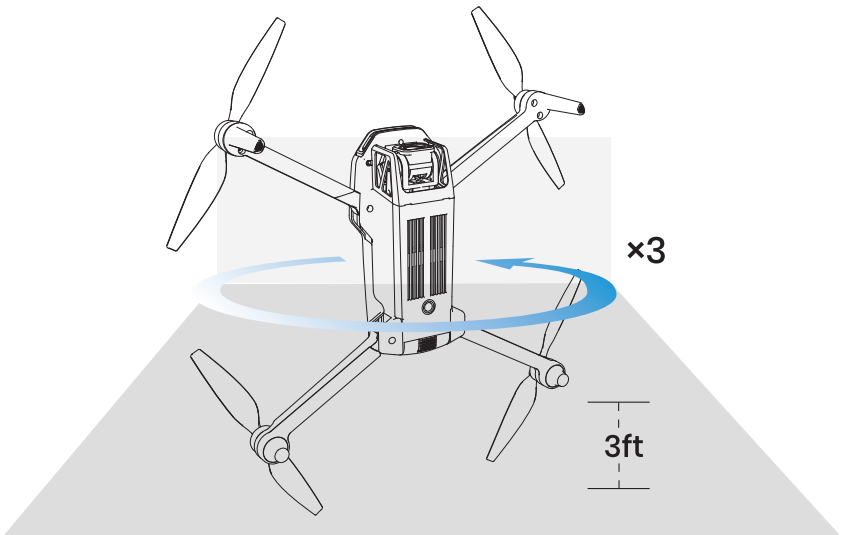

- **STEP 3**

Point the head of the drone upward, and spin the drone three times. The transmitter produces a short beep, which means that you have successfully performed a compass calibration.

⚠

· To ensure a stable flight, we recommend that pilots perform a compass calibration before each flight.
· We recommend that the pilot hold the drone approximately 3 ft above the ground while performing the compass calibration.
· DO NOT calibrate the compass in locations where magnetic interference may occur, such as close to magnetite deposits or large metallic structures such as parking structures, steel reinforced basements, bridges, cars, or scaffolding.
· DO NOT carry objects (such as mobile phones) that contain ferromagnetic materials near the drone during calibration.

3.9 Gyroscope Calibration >>

Perform calibration if any of the following conditions occur:
1. Before first use.
2. Noticeable drifting after takeoff.
3. After the drone has experienced a collision or drop.

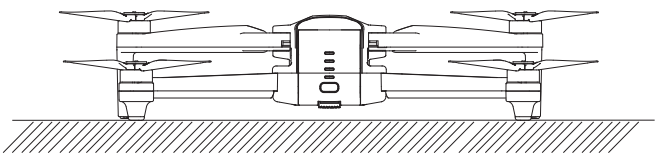

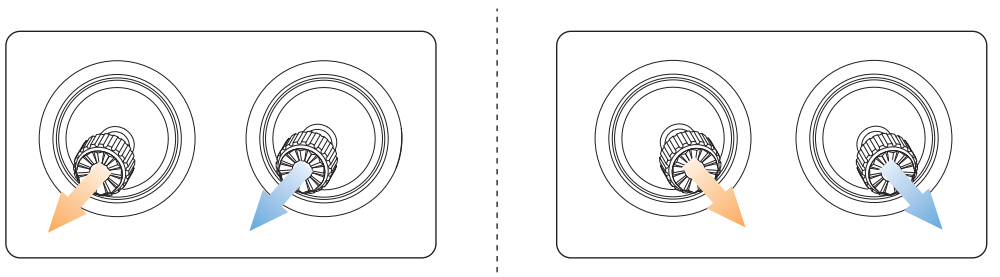

Push both joysticks to **the bottom left corner or the bottom right corner** to calibrate the gyro.
The indicator lights on the drone will blink, then turn solid, which indicates that the calibration is completed.

Do NOT perform calibration under the following conditions:
1. The drone is placed on an uneven surface.
2. The drone is moving or shaking.

3.10 Pre-Flight Checklist >>

Do not take off until the following checks have been completed.

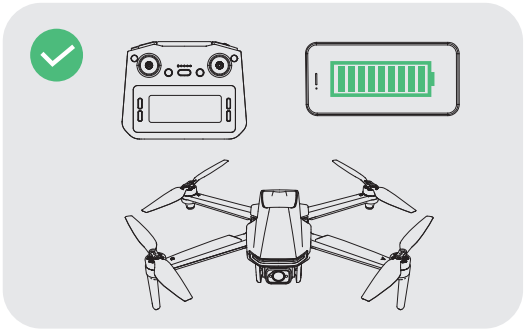

Make sure the transmitter, the cellphone and the drone battery are fully charged.

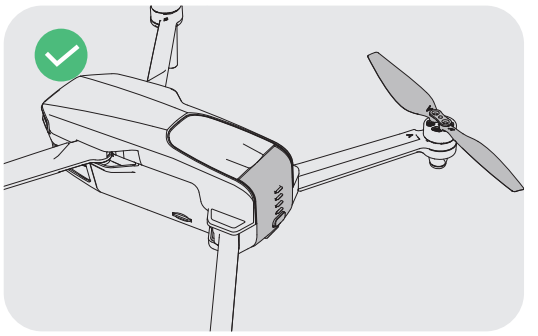

Make sure the drone battery and the propellers are installed securely.

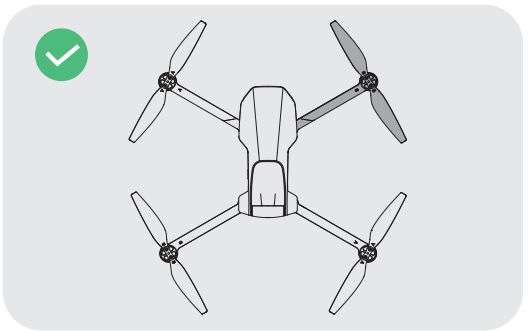

Make sure the drone arms and propellers are fully expanded.

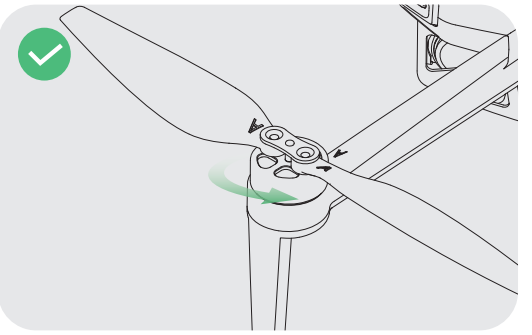

Make sure that there is nothing obstructing the motors.

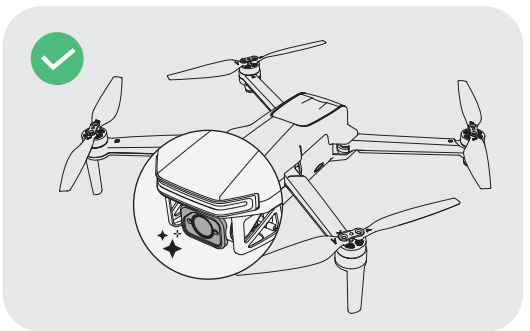

Make sure that the camera is clean.



Make sure you use accessories provided by this company.

4.1 Unlock / Lock >>

Unlock

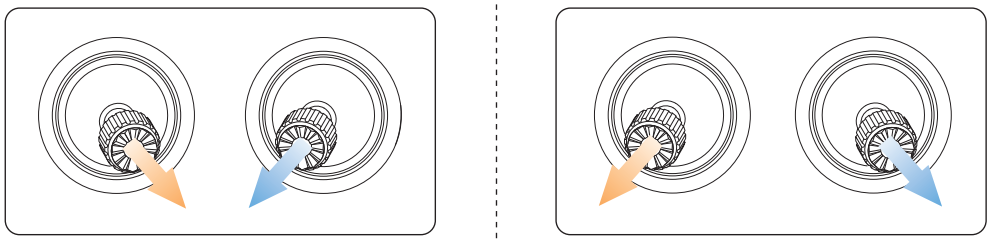

After successfully finding a GPS signal, push both joysticks to **the bottom inner or outer corner** to unlock the motors. Release both joysticks simultaneously once the motors are spinning.

Lock

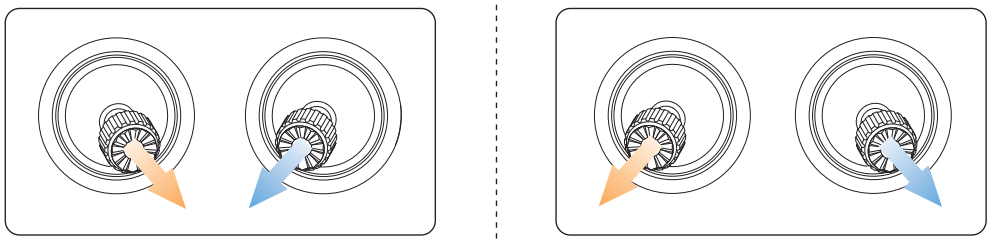

Before takeoff, after unlocking the motors, push both joysticks to the bottom inner or outer corner to lock the motors.

If no command is given, the motors will lock themselves automatically 10s after the they are unlocked.

4.2 Takeoff / Landing >>

Takeoff/Landing

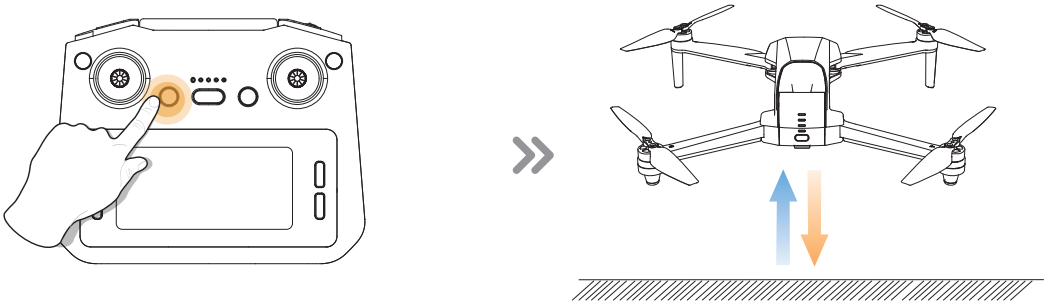

Takeoff

Long press the button, the drone will take off automatically and hover at 5 ft. Now you can control the drone by using the joysticks.

Landing

When the drone is in the air, long press the button. The drone slowly descends to the ground.

When operating the drone, it's important to periodically adjust the orientation and distance between the transmitter and the drone to ensure that the drone always remains within the optimal communication range.

Optimal Reception Range:



Weaker Signal:

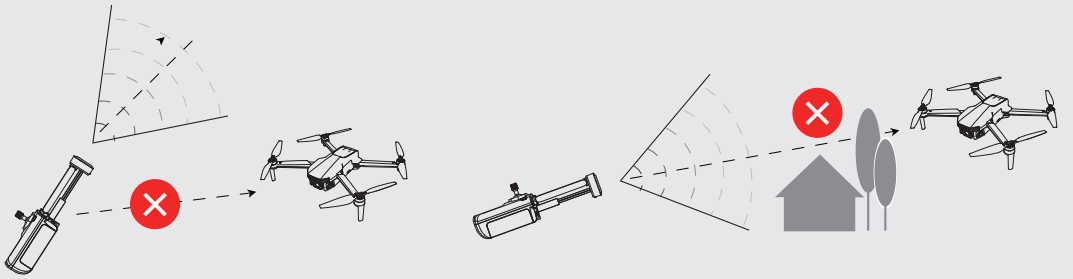

4.3 Control Stick Mode >>

Mode 2 (Left Hand Throttle)

The joysticks of the transmitter can be used to control the drone movements. The joysticks can be operated in Mode 1 or Mode 2.
The default control mode of the transmitter is Mode 2. In this manual, all operations are demonstrated using Mode 2 controls.

Left Joystick

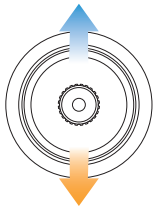

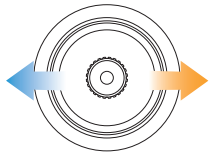

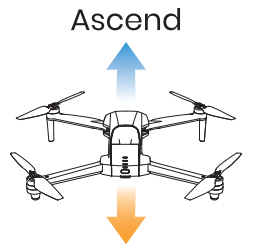

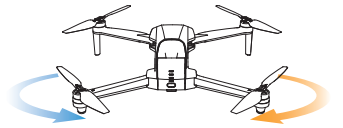

Right Joystick

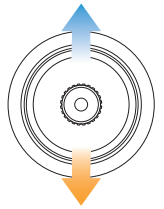

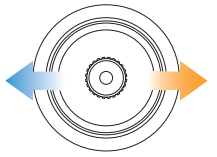

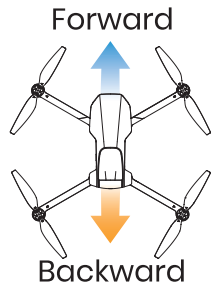

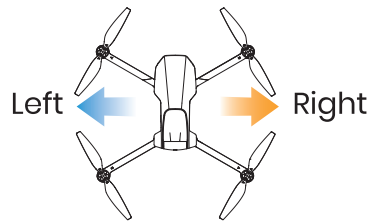

4.3 Control Stick Mode >>

Mode 1 (Right Hand Throttle)

To enter Mode 1, press and hold both ⏻ and ⇅ while turning on the transmitter, and hold them until it powers on.

Left Joystick

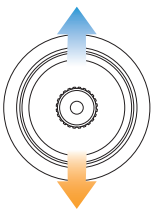

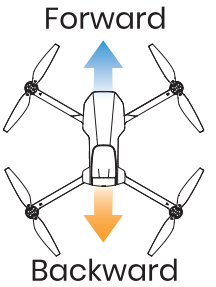

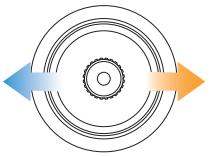

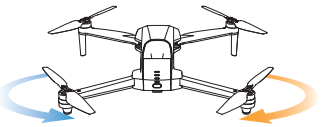

Right Joystick

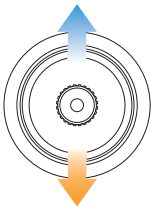

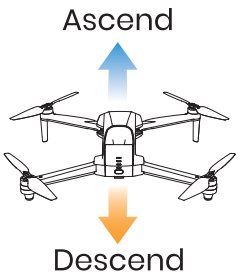

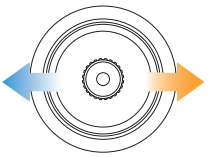

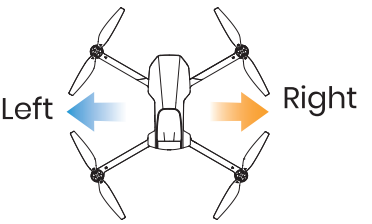

4.4 Flight Stabilization >>

Optical Flow Positioning

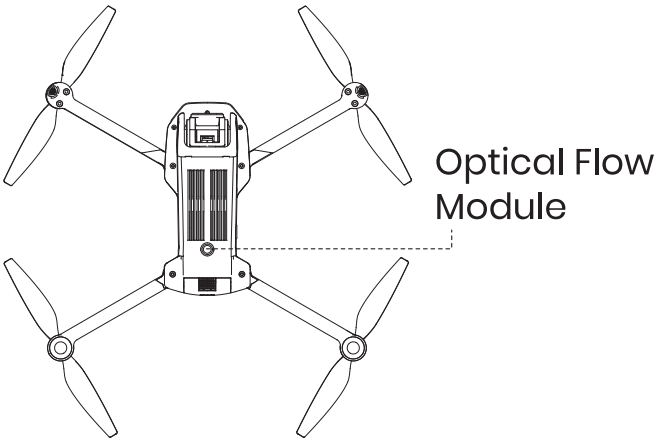

The Optical Flow Positioning System consists of a camera module, which acquires the position information of the drone through visual images to ensure precise positioning of the drone.

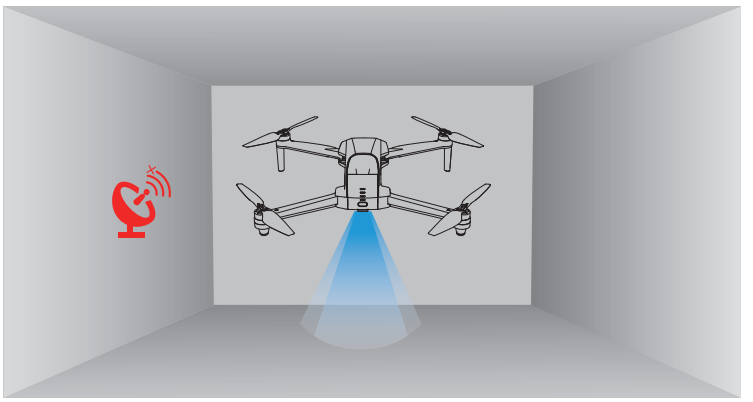

The Optical Flow Positioning System is typically used in an indoor environment when the GPS signal is weak or unavailable. The optimal usage height for Optical Flow Mode is **1.6-9.8 ft** .

- The precision of the Optical Flow Positioning System is easily affected by the light intensity and features of the surface textures. Once the image sensor is not available, your drone will switch on the altitude-hold function automatically. Please exercise utmost caution when operating the drone under these circumstances:

4.4 Flight Stabilization >>

Optical Flow Positioning

• Fly over surfaces without clear patterns or textures.
• Fly over extremely dark or bright surfaces.
• Fly in an area where the lighting changes dramatically and frequently.
• Fly over moving surfaces or objects. (e.g., above crowds, above bushes or grasses swayed by strong winds).
• Fly over water or transparent surfaces.
• Fly over highly light reflective surfaces. (e.g., mirrors).
• Fly over monochrome surfaces (e.g, pure black, red, or green).
• Flying over surfaces with repeating identical patterns or textures (e.g, tiles with the same design).
• Flying speed should be controlled not to be too fast.
- Keep sensors clean at all times.
- DO NOT scratch or tamper with the sensors. DO NOT use the aircraft in dusty or humid environments.
- Make sure that the light is bright enough and the surface is with clear textures so that the Optical Flow Positioning can acquire the movement information through recognizing the ground textures.

Altitude-Hold Function

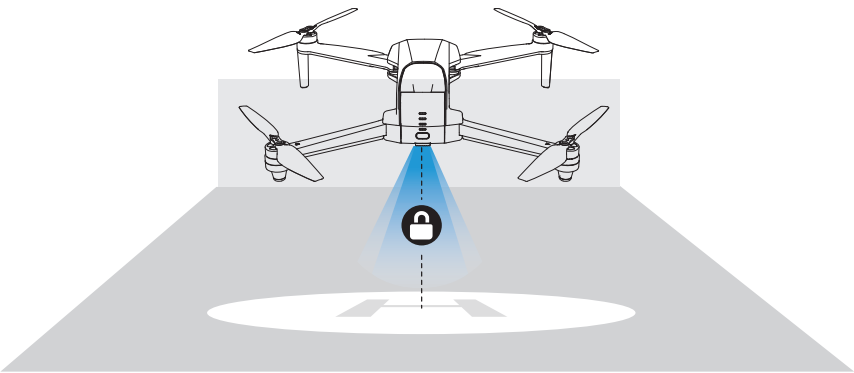

The drone is designed with an altitude-hold function to maintain its altitude after releasing the left joystick. (The left joystick will automatically spring back to the middle)

5.1 Emergency Stop >>

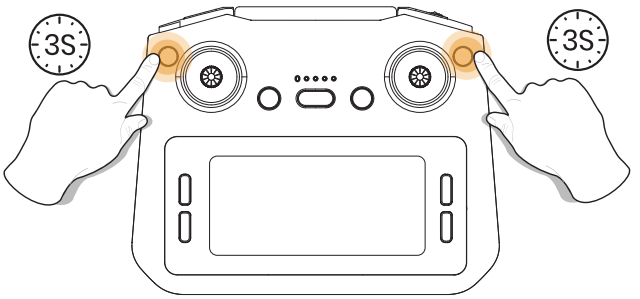

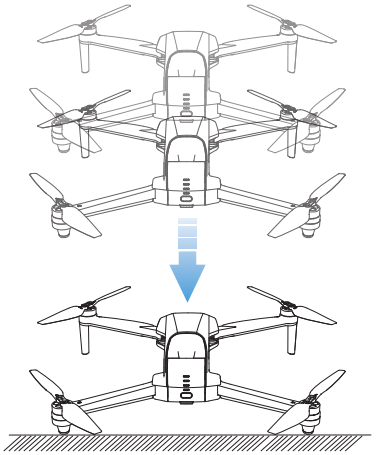

Press and hold both the button and the button simultaneously for 3 seconds to initiate the emergency stop, and the drone will descend rapidly.

⚠ · When the Emergency Stop is triggered, the propellers will immediately stop spinning, and the drone will lose control, falling freely from its current height. This could potentially hit people or anything in surrounding, leading to injury or damage to valuable items.

· The Emergency Stop should only be triggered in emergency situations to minimize risk and reduce damage. Emergency situations include, but are not limited to: the drone losing control and colliding with people or animals or items, hair or other objects becoming entangled in the propellers, or the drone posing a threat to the safety of other aircraft, where immediate flight cessation or an immediate stop of the propellers is required.

5.2 Return to Home >>

The Return to Home (RTH) function brings the drone back to the recorded Home Point. This function can only be triggered when the drone is in GPS mode.

The drone's default home point is the location where it first receives a strong GPS signal. The drone will record its takeoff position at that moment as the home point. During flight, if the drone lands at a new location, the position of the next takeoff will become the newly recorded home point.

1 Smart RTH:

Short press the button to activate Smart RTH. The drone will fly back to the last recorded Home Point.
During Smart RTH, the transmitter will keep on beeping.
Short press the same button again to exit Smart RTH.

2 Failsafe RTH:

The Failsafe RTH will be activated when:

1. The drone receives a strong GPS signal ; and
2. there is a pre-recorded Home Point; and
3. the connection between the transmitter and the drone is lost; and
4. the compass has no interference.

Once the Failsafe RTH is activated, the transmitter will beep. The drone will start to fly back to the pre-recorded Home Point automatically. If the connection between the drone and the transmitter is re-established during the Failsafe RTH procedure, the pilot can manually end the RTH procedure by pressing the button again, thus regaining control of the drone.

5.2 Return to Home >>

The following are the returning procedures for Smart RTH and Failsafe RTH.

When connected to the app:

Note: The app allows you to set the Return-to-Home (RTH) altitude (default: 65 ft).

a **RTH distance > 98 ft ,** the drone will ascend to the preset RTH altitude before returning home. If the current altitude is higher than the preset RTH altitude, the drone will return at its current altitude.

b **16 ft < RTH distance ⩽ 98 ft,** the drone will ascend to 65ft before returning home. If the current altitude is higher than 65ft, the drone will return at its current altitude.

c **RTH distance ⩽ 16 ft ,** the drone will land directly.

When the app is not connected:

When operating with the transmitter only (without the App), the RTH parameters are determined as follows:

a If Beginner Mode is ***ON*** :

The horizontal distance limit is 98 ft and the altitude limit is 98 ft. RTH altitude is set to 65 ft.

b If Beginner Mode is ***OFF*** :

The horizontal distance and altitude limits are set to maximum range. RTH altitude is set to 164 ft.

Note:

When using the App, RTH settings will follow the App configuration.

When using the transmitter only, RTH settings will follow the transmitter configuration.

5.2 Return to Home >>

3 Low Voltage RTH:

When the flight battery is too low or there is not enough power to return home, the pilot should land the drone as soon as possible to avoid damage to the drone or other hazards. To prevent unnecessary risks due to insufficient battery power, the low voltage RTH function will be automatically triggered when the drone battery is low. According to the remaining power, there are two scenarios:

The First Stage of Low Voltage RTH: The drone will automatically return to the Home Point. While the drone is returning, the transmitter will emit continuous beeping sounds.

After the drone returns, you will be restricted to flying it within a ***safety zone***, which is centered around the Home Point and has a radius of 98 ft. The drone will not be able to exit this zone.

The Second Stage of Low Voltage RTH: The drone will descend directly to the ground, and the transmitter will emit rapid, continuous beeping sounds.

⚠ · This drone is not equipped with an obstacle avoidance system. During the RTH process, please carefully observe the flight path and avoid obstacles.
· If the GPS signal is weak or unavailable, the RTH cannot be activated.
· Always keep the transmitter ON during flights. Turning it off will trigger the Failsafe RTH due to a lost connection.

5.3 Camera Features >>

Photo / Video

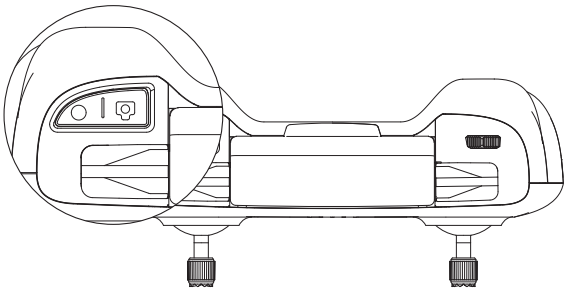

Take Photo: Short press the button on the transmitter to take a photo. The transmitter will beep once, indicating that a photo has been taken.

Record Video: Short press the button on the transmitter. The transmitter will beep twice, indicating that video recording has started. Short press the same button again to stop recording. The transmitter will beep twice.

Camera Adjustment



Adjust the camera angle by scrolling the camera adjustment dial . (tilt range: -90°~ 0°)

5.4 Speed Switch >>

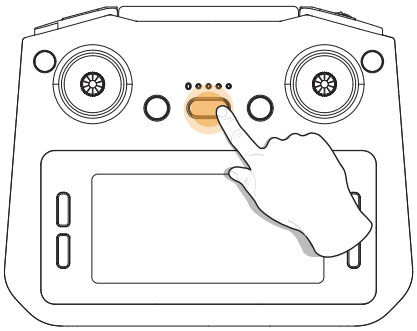

This drone offers three speed modes: **Low, Medium and High.** By default, it's set to Low speed. (The low speed is 16.4 ft/s. The medium speed is 23 ft/s. The high speed is 29.5 ft/s.)

To toggle between the modes, short press the **SPEED** button. The transmitter beeps once to indicate low speed, beeps twice to indicate Medium Speed and beeps three times to indicate High Speed.

5.5 Headless Mode>>

The Headless Mode is a great training tool for beginner pilots. It is also useful when the drone is too far from the pilot **(which makes it difficult to tell its orientation)**.
It keeps the drone traveling forward, backward, left, or right when you move the right joystick in those directions, regardless of which way the front of the drone is pointed.

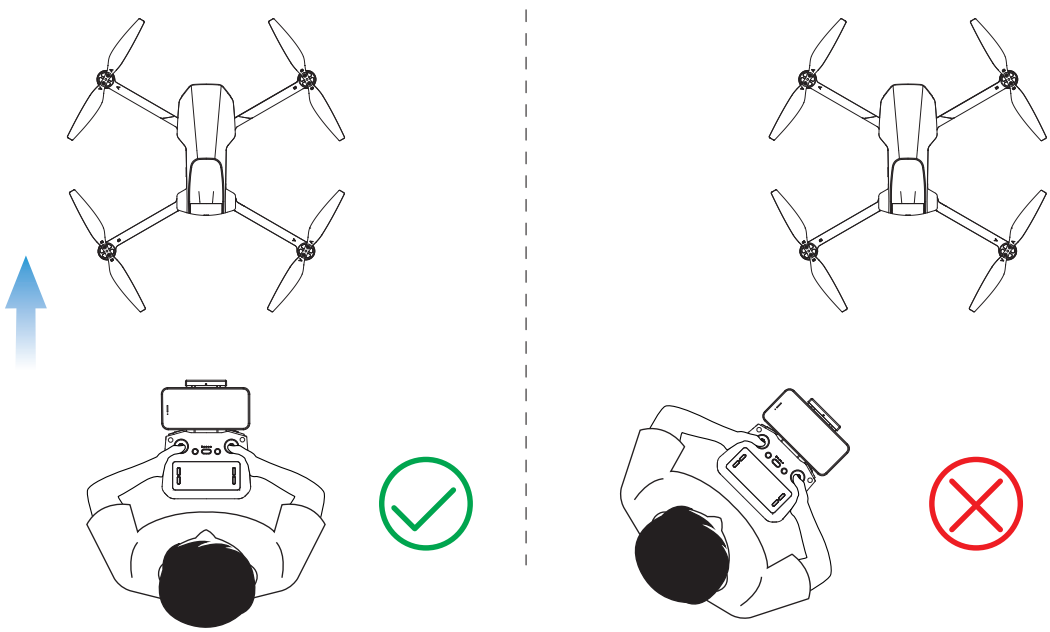

The pilot should stay facing the same direction that the drone’ s head points to when it takes off.

5.5 Headless Mode>>

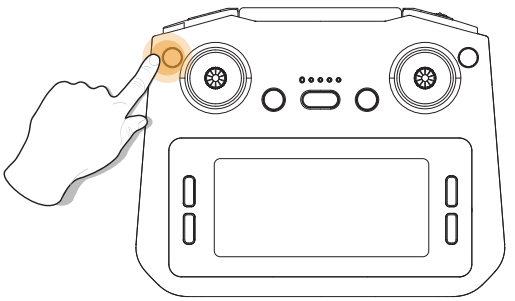

1. **Activating:** Short press the button to activate this mode. While in Headless Mode, the drone indicator light will flash continuously.

2. **Deactivating:** Short press the button once more. A prolonged beep will sound, and the drone indicator light will return to a steady glow, indicating the drone has successfully exited Headless Mode.

*** Why is the orientation of the drone important?**

In normal flying mode, the control of the drone movement can sometimes be counter-intuitive for beginners. For instance, when the drone is in the air with its head pointing to your right, if you push the right joystick forward, the drone will fly to your right, instead of flying forward.

With the headless mode, the drone has a fixed "head." In Headless Mode, the drone always remembers the side its head points to during takeoff as the front side. This means that if the drone takes off with its head pointing forward, it doesn't matter how the drone is oriented in the air, when you push the right joystick forward, the drone will fly forward. Or, when its head is pointing to you, if you push the right joystick to the left, the drone will fly to your left.

6.1 App Interface >>

The Interface

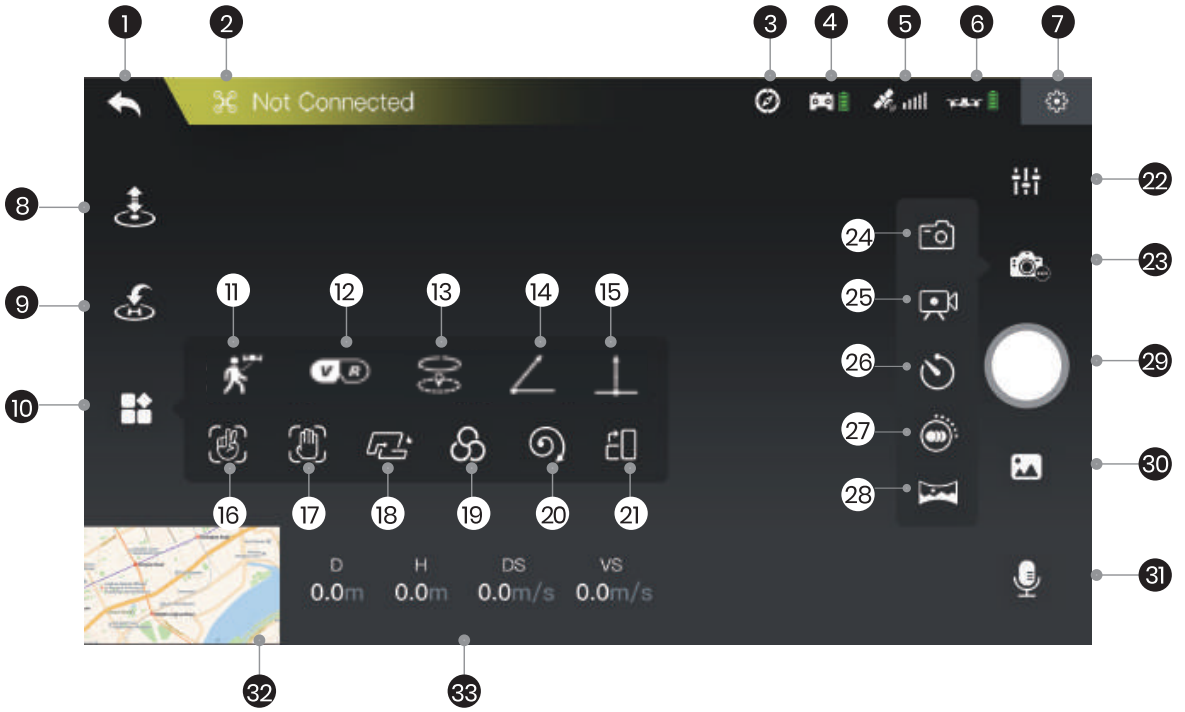

1 **Homepage :** Tap this icon to return to the main menu.

2 Not Connected **System Status :** Displays the flight status and various warning messages.

3 **Interference Index of Compass :** Displays the current level of electromagnetic interference. "0" means no interference, "1000" means max interference.

4 **Transmitter Battery Level :** Real-time display of the current battery level of the transmitter.

5 **GPS Signal :** Displays current GPS signal strength.

6 **Drone Battery Level :** Real-time display of the current battery level of the drone.

7 **Settings :** Tap to enter the setting interface. Alter settings for flight height/distance, return altitude, etc.

8 **Takeoff/Landing :** Tap the icon, follow the instructions in the prompt box to takeoff/land.

6.1 App Interface >>

The Interface

9 **Return to Home :** The drone returns to the last recorded Home Point.

10 **Multi-functions**

11 **GPS Follow :** The drone stays at a distance from the operator and follows the GPS position of the paired mobile phone.

12 **VR Screen-Split :** Pair the mobile phone with a pair of VR glasses (not included) first. Then use this function to watch 3D live feed in real-time.

13 **Point of Interest :** The drone flies around a point.

14 **Catapult :** The drone flies backward and ascends, with the camera locked on the subject. A video is made during this.

15 **One-key Ascension :** The drone ascends with the camera locked on the subject. A video is made during this.

16 **Gesture Selfie :** When in this mode, you can trigger the shutter of the drone camera by holding a "V" -sign near your face. (The drone camera should be pointing to your face.)

17 **Gesture Selfie Video :** When in this mode, you can trigger the shutter of the drone camera by holding your palm near your face. (The drone camera should be pointing to your face.)

18 **TapFly :** The drone flies along the flight path you draw on the screen of the mobile phone.

19 **Camera Filter**

20 **Spiral Up :** The drone ascends and spiral around the subject. A video is made during this.

21 **Portrait :** The shooting mode will turn from landscape to portrait.

22 **Camera Settings :** Tap to access and configure camera parameters.

6.1 App Interface >>

The Interface

23 Shooting Mode

24 Take Photo : Tap to use the photo function.

25 Record Video : Tap to use the record function.

26 Time-lapse : Videos captured using this feature will be played back at a faster speed. You can select the playback rate as needed.

27 Slow Motion : Videos captured using this feature will be played back at a slower speed. You can select the playback rate as needed.

28 Panorama : Tap to use the Panorama function.

29 / Shutter

30 Album : Tap to preview photos and videos taken by the drone camera.

31 Voice Recording : Record sounds and voices with your mobile phone while shooting videos.

32 Map : Tap the Mini Map to switch between Camera View and Map View.

33 Flight Parameters

- D N/A ft — Flight Distance : Horizontal distance from the Home Point.
- H N/A ft — Flight Altitude : Vertical distance from the Home Point.
- DS **N/A** ft/s — Horizontal Speed : Drone's speed in the horizontal direction.
- VS **N/A** ft/s — Vertical Speed : Drone's speed in the vertical direction.

6.2 APP Features >>

Beginner Mode

The beginner mode is the default operating mode. When in the Beginner mode:

1. The flight distance can not exceed 98 ft.
2. The flight altitude can not exceed 98 ft.
3. The return altitude during RTH is 65 ft.

If you want to alter the above-mentioned parameters, please first turn off the beginner mode. You can go to the "Settings" to modify these parameters.

Flight Settings On APP

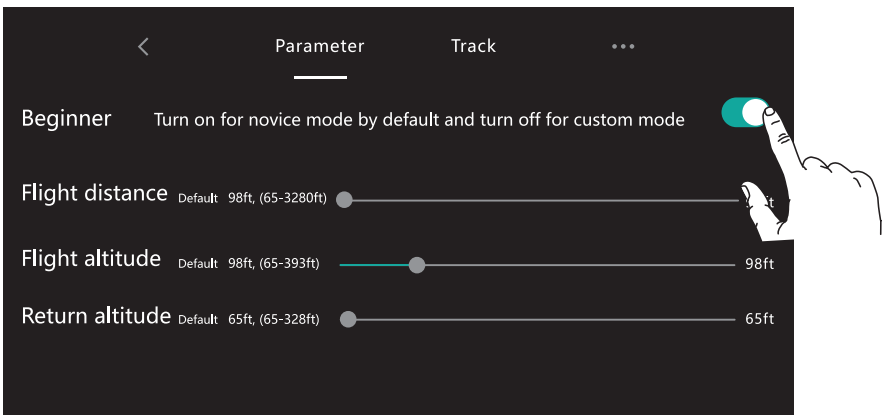

6.2 APP Features >>

GPS Follow

When the GPS Follow function is enabled, the drone will track your movement by following the GPS signal on your cell-phone. (Please make sure that the connection between the drone and the transmitter is strong and stable.)

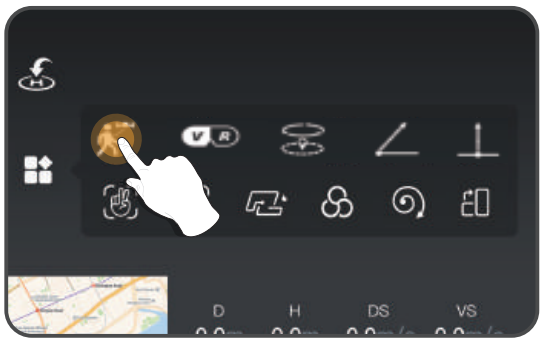

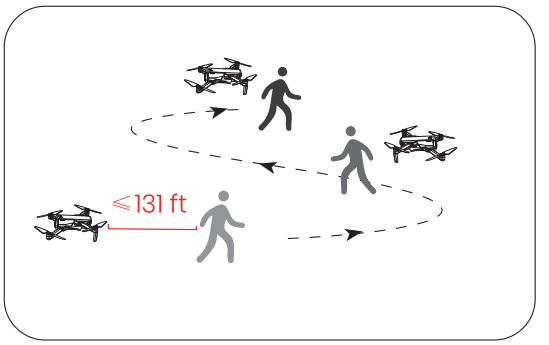

1. Make sure that the drone's flight distance is within 131 ft. Tap the ( ) icon first, then select the ( ) icon.
2. Follow the prompt box to enter the GPS Follow function — the drone will now follow your cellphone's coordinates.
3. To exit GPS Follow function, simply tap the ( ) icon on the app interface again.

⚠ · The GPS Follow function can only be used if the flight distance is within 131 ft.

· Follow Me function may be difficult to activate if the mobile phone's GPS signal is too weak. This could be caused by signal interference from surrounding buildings, trees, mobile network congestion etc.

· Please use this function in an open area and be mindful of your surroundings. The drone is NOT equipped with obstacle avoidance.

· The follow speed is 13.1 ft/s.

6.2 APP Features >>

Point of Interest



1. Tap the ( ) icon first, then select the ( ) icon, and follow the prompt box to activate the Point of Interest function. You can set the circling radius in the prompt box.
2. The moment you activate this function, the drone will record its current flight position as the "point of interest". It will then continuously circle around that point clockwise. (default radius: 16 ft)
3. To exit Point of Interest mode, simply tap the ( ) icon again.

6.2 APP Features >>

Catapult



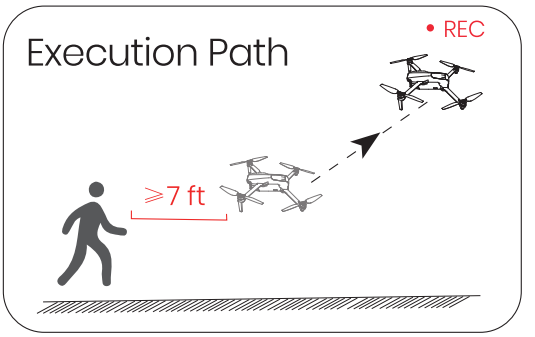

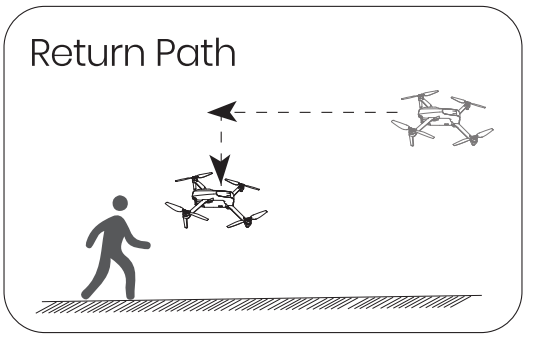

1. Make sure that the drone is a least 7 ft away from the target. Adjust the camera angle so it points directly to the target.
2. Tap the ( ) icon, then tap ( ). Swipe in the prompt box to confirm.
3. The drone will automatically start recording, while flying about 82 ft away from the target.
4. After this, it will fly back to the starting point.
5. Tap the ( ) icon again, or push the right joystick to exit this function.

⚠ Make sure there is no obstacles or people in the flight path of the drone. In case of emergency, push the right joystick to exit Catapult.

6.2 APP Features >>

One-key Ascension

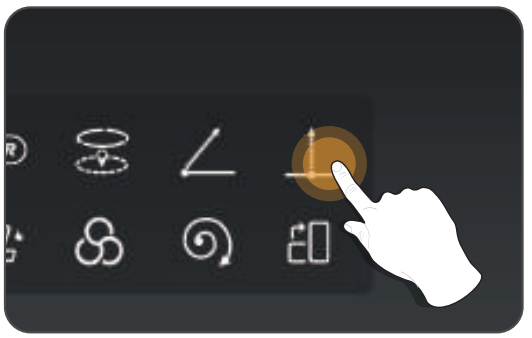

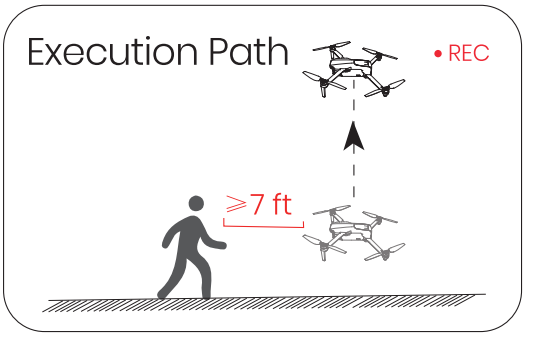

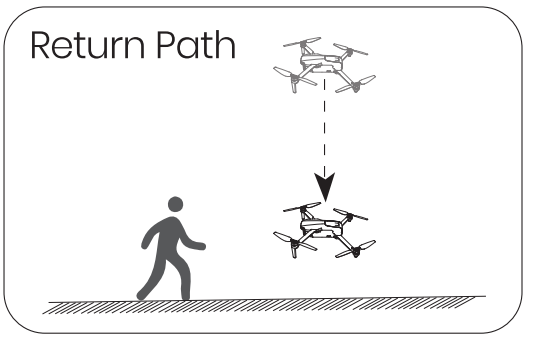

1. Please make sure that the drone is a least 7 ft away from the target. Adjust the camera angle so it points directly to the target.
2. Tap the ( ) icon, then tap ( ). Swipe in the prompt box to confirm.
3. The drone will start recording and climb 49 ft upwards.
4. After this, the drone will fly back to the starting point.
5. Tap the ( ) icon again, or push the right joystick to exit this function.

⚠ Make sure there is no obstacles or people in the flight path of the drone. In case of emergency, push the right joystick to exit One-key Ascension.

6.2 APP Features >>

TapFly

Before using TapFly, pre-load the map by connecting your phone to the internet and tapping the map icon; auto-loading occurs. Enlarging the map for TapFly is advised.



1. Tap the ( ) icon, then Tap ( ).
2. You can tap a dozen of times (but no more than 16) on the phone screen to create a flight path. Hit **"GO"** to submit the route. The drone will then fly along the path created by connecting the points you tap in order.
3. You can exit TapFly by tapping the ( ) icon again, or pushing the right joystick in any direction.

⚠ DO NOT fly the drone towards people, animals, or small/thin objects (e.g. tree branches and power lines) or transparent objects (e.g. glass or water).

6.2 APP Features >>

Spiral Up

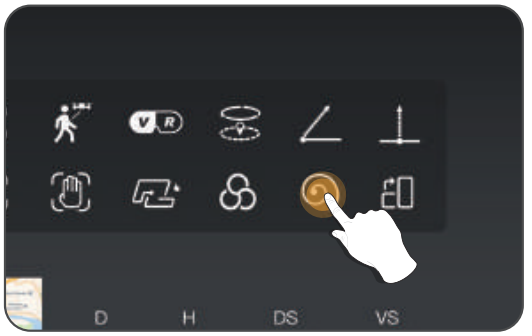

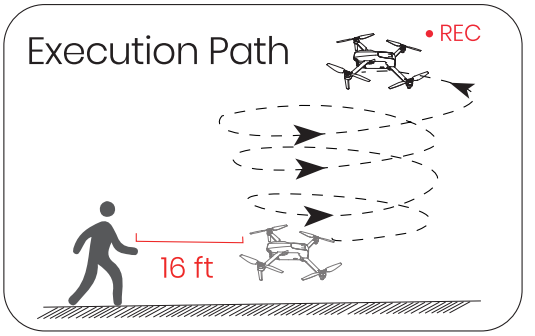

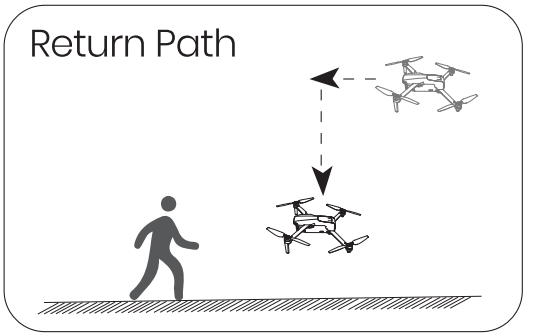

1. Make sure that the drone is about 16 ft away from the target. Adjust the camera angle so it points directly to the target.
2. Tap the ( ) icon, then tap ( ). Swipe in the prompt box to confirm.
3. The drone will automatically ascend and circle around (max. radius: about 49 ft) and start recording.
4. After this, it will fly back to the starting point.
5. Tap the ( ) icon again, or push the right joystick to exit this function.

! Make sure there is no obstacles or people in the flight path of the drone. In case of emergency, push the right joystick to exit Spiral Up.

6.2 APP Features >>

Time-lapse



1. Tap the ( ) icon, then tap ( ) to use time-lapse shooting.
2. Swipe to choose the video playback speed, tap again to confirm.
3. Tap the shutter ( ), the time-lapse shooting begins.
4. Tap the shutter ( ) again to stop recording.

Slow Motion



1. Tap the ( ) icon, then tap ( ) to use slow motion shooting.
2. Swipe to choose the video playback speed, tap again to confirm.
3. Tap the shutter ( ), the slow motion shooting begins.
4. Tap the shutter ( ) again to stop recording.

6.2 APP Features >>

Panorama

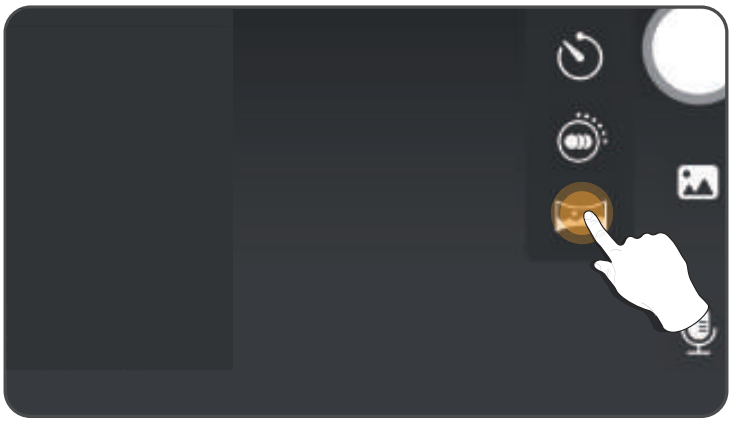

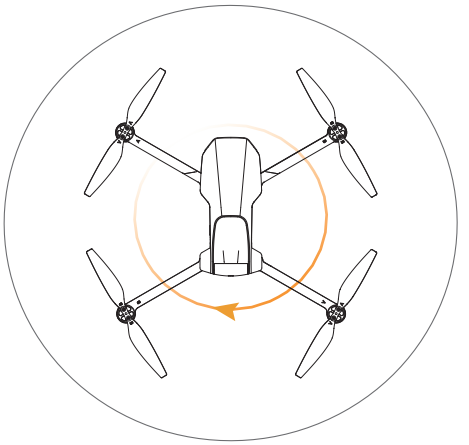

1. Tap the ( ) icon, then tap ( ) to use the Panorama function.
2. Tap the shutter ( ).
3. The drone will maintain its current position and rotate. A panorama picture is then auto-generated and saved to the album. A prompt box will pop up when this is done.

7.1 Troubleshooting >>

Issue	Possible Causes	Suggested Solutions
Motors won't start.	Weak GPS signal.	1. Ensure you're operating in an area with strong GPS reception. 2. For indoor operations, long-press the button to transition to Altitude-hold Function. (See Page 19 in the user manual)
	The drone's battery is running low(as indicated by a continuous red light on the drone).	Recharge the battery.
	The compass isn't calibrated(indicated by continuously rapid flashing of the drone's status lights)	Conduct a compass calibration. For step-by-step instructions, refer to the "Compass Calibration" section in the user manual.(See Page 21 in the user manual)
	The left and right joysticks were not properly positioned during the unlocking process.	Push both of the joysticks simultaneously toward the inner, lower corners.
Unstable flight or abnormal posture.	GPS signal instability due to flying near buildings or in areas with obstructions.	Operate the drone in open spaces free from obstructions.
	Compass interference	1. Manually land the drone immediately and recalibrate the compass. 2. Try operating in a different location, ensuring you're away from buildings, power lines, and signal towers.
	Propeller deformation or damage.	Replace with new propellers.
Video lag or limited transmission range	Interference with the video transmission signal.	Operate the drone in open areas away from potential obstructions like buildings, power lines, and towers to minimize interference.
	The transmitter and mobile device are not oriented towards the drone.	Ensure the transmitter and mobile device are facing the drone's direction to optimize signal strength.
	Overly rapid joystick movements during flight control.	Use gentle, steady joystick movements during flight.
	Phone performance issues.	Close any unused apps running in the background to optimize your phone's performance.

7.2 Specifications >>

- **DRONE:**

Model: HS175D	Weight: 247 g/8.71 oz
Max Flight Time[1] (per battery) : 30 minutes (in a windless environment)	
Max Flight Speed: 29.5 ft/s	Max Flight Height: 394 ft/120m
Max Takeoff Altitude : 11483 ft/3500m	Max Wind Speed Resistance : 18 ft/s
Operating Temperature Range: 32° to 104°F (0° to 40°C)	
Size: 150×81×60mm (folded)	335×236×60mm (unfolded)

- **DRONE BATTERY:**

Model: 753075G	Capacity: 2100 mAh
Voltage: 7.7 V	Max Charging Voltage: 8.8 V
Battery Type: Lithium-ion Polymer Battery	Rated Power: 16.17 Wh
Charging Temperature Range: 41° to 104°F (5° to 40°C)	Charging Time: about 1.5 hours (Using Fast Chargers)

- **USB CHARGING CABLE:**

Input: 5V/2A	Rated Power: ≤10 W

7.2 Specifications >>

• CAMERA:

Operating Frequency: 5500-5700 MHz	
Max Transmission Distance: 9843 ft/3000 m (outdoor and unobstructed)	
Photo Resolution: 3840×2160P (when stored in TF card) 3840×2160P (when stored in cellphone)	
Video Resolution: 3840×2160P@20fps;2976×1680P@30fps(when stored in TF card) 1280×720P@30fps(when stored in cellphone)	
Controllable Range: -90° to 0°	Supported File Systems: FAT32
Supported TF Cards: Supports a TF Card (Class 10 or above) with capacity of up to 256 GB	
Photo Formats: JPEG	Video Formats: MP4

• TRANSMITTER:

Operating Frequency: 5745-5805 MHz	Charging Time: about 3 hours
Max Flight Distance: 9843 ft/3000 m (outdoor and unobstructed)	Usage Time: about 4 hours
Operating Temperature Range: 32° to 104°F (0° to 40°C)	
Battery Type: 3.7V 1800mAh Lithium-ion Battery	
Supported TF Cards: Supports a TF Card (Class 10 or above) with capacity of up to 256 GB	
Supported File Systems: FAT32	Resolution: 1280×720P

[1] Measured in a controlled test environment. The specific test conditions are as follows: hovering in a windless laboratory environment, switched to photo mode (without taking photos during flight), and flying until low-battery landing. Results may vary depending on the environment, usage conditions, and firmware version.

7.3 Propeller Replacement >>

- **Removal:**

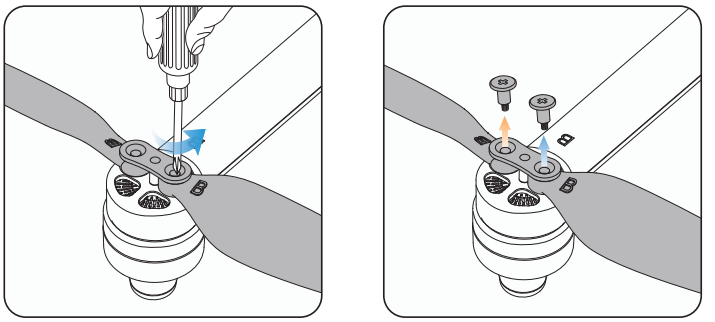

Use the screwdriver to turn the screws anti-clockwise to remove them. Then pull the propellers up.

- **Installation:**

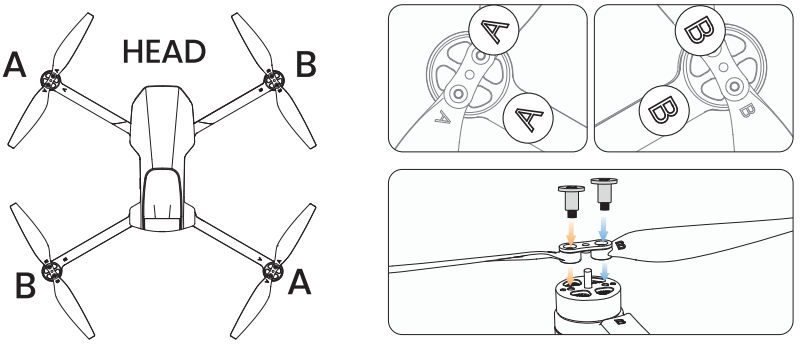

Match A propellers to A arms, and B propellers to B arms. Tighten the two screws with the screwdriver.

⚠ · Before each flight, check if the propellers are secure and tight.
· If the propellers become deformed or damaged, please replace them before flying again.

7.4 Contact Information >>

Please do not hesitate to contact us if you need further support.

usa@holystone.com (America)
ca@holystone.com (Canada)
eu@holystone.com (Europe)
au@holystone.com (Australia)

+1 (833) 766-4733

7.5 Compliance Information >>

FCC Notice :

This device complies with part 15 of the FCC Rules. Operation is subject to the following two conditions:
(1) This device may not cause harmful interference, and
(2)This device must accept any interference received, including interference that may cause undesired operation.

The Supplier's Declaration of Conformity is available at the following address:

https://www.holystone.com/Download/US/HS175D_FCC_sDoC.pdf

This equipment has been tested and found to comply with the limits for a Class B digital device, pursuant to part 15 of the FCC Rules. These limits are designed to provide reasonable protection against harmful interference in a residential installation. This equipment generates, uses and can radiate radio frequency energy and, if not installed and used in accordance with the instructions, may cause harmful interference to radio communications. However, there is no guarantee that interference will not occur in a particular installation. If this equipment does cause harmful interference to radio or television reception, which can be determined by turning the equipment off and on, the user is encouraged to try to correct the interference by one or more of the following measures:

- Reorient or relocate the receiving antenna.
- Increase the separation between the equipment and receiver.
- Connect the equipment into an outlet on a circuit different from that to which the receiver is connected.
- Consult the dealer or an experienced radio/TV technician for help.

Changes or modifications not expressly approved by the party responsible for compliance could void the user's authority to operate the equipment.

RF Exposure :

The equipment complies with FCC radiation exposure limits set forth for an uncontrolled environment. This device should be installed and operated with minimum distance 20cm between the radiator & your body. This part belongs to the drone.

This equipment complies with FCC/ISED radiation exposure limits set forth for an uncontrolled environment. End user must follow the specific operating instructions for satisfying RF exposure compliance. This transmier must not be co-located or operating in conjunction with any other antenna or transmier.

The portable device is designed to meet the requirements for exposure to radio waves established by the FCC/ISED. These requirements set a SAR limit of 1.6 W/kg averaged over one gram of tissue.

7.5 Compliance Information >>

IC Statement :

This device contains licence-exempt transmitter(s)/receiver(s) that comply with Innovation, Science and Economic Development Canada' s licence-exempt RSS(s). Operation is subject to the following two conditions:
(1) This device may not cause interference.
(2) This device must accept any interference, including interference that may cause undesired operation of the device.
L' émetteur/récepteur exempt de licence contenu dans le présent appareil est conforme aux CNR d' Innovation, Sciences et Développement économique Canada applicables aux appareils radio exempts de licence.
L' exploitation est autorisée aux deux conditions suivantes :
(1) L' appareil ne doit pas produire de brouillage;
(2) L' appareil doit accepter tout brouillage radioélectrique subi, même si le brouillage est susceptible d' en compromettre le fonctionnement.

CAN NMB-003 (B) :

RF Exposure
Radiation Exposure Statement:
This equipment complies with IC radiation exposure limits set forth for an uncontrolled environment. This equipment should be installed and operated with a minimum distance of 20cm between the radiator & your body.
Déclaration d'exposition aux radiations:
Cet équipement est conforme aux limites d'exposition aux rayonnements IC établies pour un environnement non contrôlé. Cet équipement doit être installé et utilisé avec un minimum de 20 cm de distance entre lasource de rayonnement et votre corps.

EU RF Power (EIRP) : <14 dBm (5745-5805MHz)

Caution :

The max operating of the EUT is 40°C. and shouldn' t be lower than 0°C.
The device complies with RF specifications when the device used at 0mm from your body.
Declaration of Conformity.
We, Xiamen Huoshiquan Import & Export CO., LTD hereby, declare that the UAS HS175D is of class C0, and in compliance with the RED Directive 2014/53/EU, the RoHS Directive 2011/65/EU, Machinery Directive 2006/42/EC and UAS Delegated Regulation 2019/945/EU amended by Delegated Regulation 2020/1058/EU.
The full EU declaration of conformity is accessible at the following website:
http://www.holystone.com/Download/CE/HS175D_EU_DOC.pdf
This product can be used among EU member states.

7.5 Compliance Information >>

Manufacturer Information :

Manufactured by Xiamen Huoshiquan Import & Export CO.,LTD
Address: Unit 1, Room 501, Hongxiang Building, No.258 Hubin Nan Road, Siming District, Xiamen, China
+1 (833) 766-4733

MTOM Statement

HS175D is a quadrotor drone. The MTOM of HS175D is 247 g, including the propellers, the Flight Battery and TF card, which is compliant with C0 requirements.
Users must follow the instructions below to comply with the MTOM C0 requirements. Otherwise, the drone cannot be used as a C0 aircraft:
1. DO NOT add any payload to the aircraft except the items listed in the List of Items including qualified accessories section.
2. DO NOT use any non-qualified replacement parts, such as flight batteries or propellers, etc.
3. DO NOT retrofit the aircraft.

List of Items including qualified accessories

1. HS175D Propellers (HS175D-FY, 0.7 g each propeller, 8500 RPM)
2. HS175D Flight Battery (approx. 84.7 g)
3. HS175D TF card (approx. 0.3 g).

List of Spare and Replacement Parts

1. HS175D Propellers (0.7 g each propeller)
2. HS175D Flight Battery (approx. 84.7 g)

List of Safe Guards

Below is the list of the mechanical safeguards and operation safeguards for HS175D.
1. Emergency Stop function can be performed to stop the motors in case of an emergency. Refer to the Emergency Stop section for details.
2. The Return to Home (RTH) function. Refer to the GPS Return to Home section for details.
3. The Optical Flow Positioning. Refer to the Optical Flow Positioning section for details.
4. Prevent the drone from flying in restricted airspace. Refer to the Flight Environment Requirements section for details.

7.5 Compliance Information >>

Similar products produced by the same manufacturer are electrically identical. Distinguish them based on product model and appearance color.
The firmware of toy product cannot be upgraded.
In the future, new versions of the app will be released through the app store. Users can update the app by scanning the QR code in the instruction or searching “HS FLY” on the app store.

MADE IN CHINA(CN)


HOLY
STONE
Dare to fly.Soar to live.